FELTON

TECHNICAL PRODUCT INFORMATION

FELTON COLLECTION

SOFT SQUARE AERLUX® WET RAIL SINGLE SPRAY SLIDE SHOWER

FEATURES & BENEFITS

- Suitable for all pressures
- Available in PVD finishes
- Single function handpiece
- Supplied with Aerlux® jets for mains pressure situation
- Shower aperture - 38mm²
- Square rail bracket featuring gently rounded edges for a sleek, modern look
- Top entry adjustable wet rail
- Adjustable 870mm slide rail (max 820mm c-c)
- 1.5m large bore EN1113 rated hose
- 5 year warranty (T&C's apply)

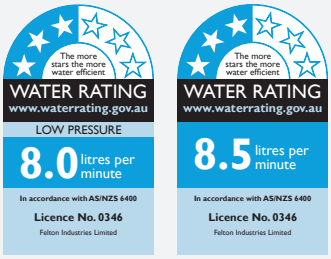

Applies to NZ only

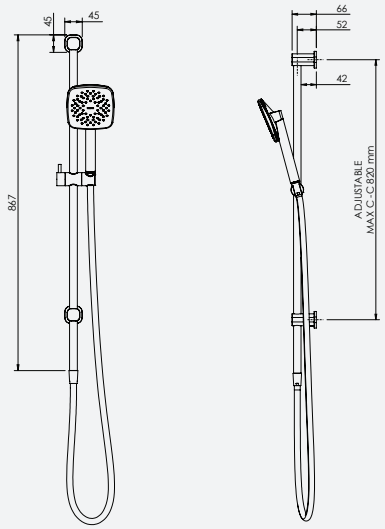



Brushed Stainless Finish | NZ AX2WRHSKCSRBN
AU AX2WRHSKCSRBNA



Brushed Gunmetal
NZ AX2WRHSKCSRGM
AU AX2WRHSKCSRGMA



Brushed Gold
NZ AX2WRHSKCSRBG
AU AX2WRHSKCSRBGA

Felton Industries Limited
Felton Australia Pty Ltd

0800 743 358
1800 729 760

www.felton.co.nz
www.feltontapware.com.au