FELTON

TECHNICAL PRODUCT INFORMATION

MOR

PULL OUT SINK MIXER

FEATURES & BENEFITS

- Suitable for mains pressure only
- Available in chrome & PVD finishes
- Single function pull out spray
- 35mm quality European cartridge with anti-scald and flow limiter
- 360° swivel spout
- 208mm reach
- Not for commercial use
- Manufactured from lead free materials
- Watermark certified
- 20 year warranty (T&C's apply)

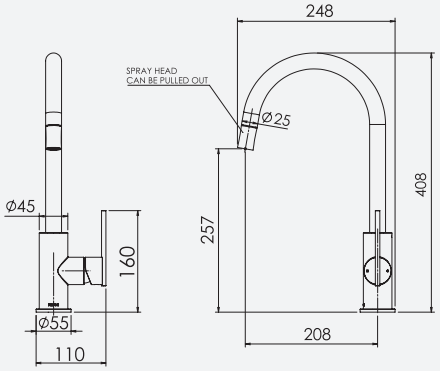





Chrome | NZ MORSMC01

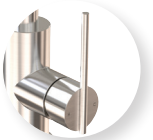

Brushed Stainless Finish
NZ MORSMBN01

EXCLUSIVE TO mico

Felton Industries Limited
Felton Australia Pty Ltd

0800 743 358
1800 729 760

www.felton.co.nz
www.feltontapware.com.au