

FELTON

INSTALLATION GUIDE

MOR PULL OUT SINK MIXER

SYSTEM REQUIREMENTS

To ensure the optimum performance and customer satisfaction please adhere to the following:

- Flush out all pipe work prior to installation.
- Maximum hot water temperature is 60˚C. If the water temperature exceeds 60˚C an approved tempering valve must be fitted.
- Installation should comply with relevant local authority requirements.
- In accordance with good plumbing practice, filters should be fitted to supply lines to eliminate damage to the ceramic cartridge from suspended solids.
- AS/NZS 3500.1 states that pressures above 500kPa can cause damage from water hammer, reduce the life of appliances, taps & fittings, cause excessive noise in the system and recommend that a pressure limiting valve (PLV) be fitted.
- Backflow protection must be provided in accordance with AS/NZS 3500 and local authority requirements, as assessed and installed by a registered plumber; backflow devices may or may not be supplied depending on product.
- Installation must be carried out by a registered plumber in accordance with AS/NZS 3500, the New Zealand Building Code and Felton instructions.
- Inspection and maintenance must be carried out in accordance with Felton instructions to ensure ongoing performance and compliance.

MAXIMUM STATIC PRESSURE
Maximum static pressure 1500kPa. If water pressure exceeds or is likely to exceed 1500kPa, an approved pressure limiting valve must be fitted.

MINIMUM STATIC PRESSURE	HOT	COLD
Mains Pressure	150kPa	150kPa

Failure to comply with the above will void warranties

BUILDING PRODUCT INFORMATION REQUIREMENTS (BPIR)

RELEVANT BUILDING CODE CLAUSES & CONTRIBUTIONS TO COMPLIANCE

This product is Watermarked under license **WM25208 - Tapware (Lead free) AS 3718: 2021**

B2 - Durability

B2.3.1 (c) applies (performance of building elements)

Proof of durability – Service history: Felton products have been installed and used in NZ for the last 50 years and warranty calls are at a minimum and within the quality principles of Felton.
Products that are WaterMark certified are subject to endurance testing.

F2 - Hazardous building materials

F 2.3.1 applies (performance)

Products in contact with drinking water is tested to AS/NZS 4020 (ensures acceptance levels of contaminants for human consumption). Compliance with Lead Free and DR Lead Free requirements where applicable. Backflow protection must be provided in accordance with AS/NZS 3500 and local authority requirements, as assessed and installed by a registered plumber; backflow devices may or may not be supplied depending on product.

G12 - Water Supplies

G12.2 applies (materials)

Felton products in contact with drinking water are tested to AS/NZS 4020, ensuring no water contamination and compliance with Lead Free and DR Lead Free requirements where applicable.

G12.3.2 applies (contamination of water)

All Felton products are designed, manufactured and inspected/tested, that are WaterMark certified, are subject to contamination of water testing (AS/NZS 4020).Compliance with Lead Free requirements where applicable.

G12.3.5 applies (performance)

Felton sanitary fixtures intended for utensil washing and personal washing, showering, or bathing are designed to be connected to a hot water supply and tested to AS/NZS 4020, ensuring suitability for potable water, non-contamination, and compliance with the performance requirements of NZ Building Code G12.

G12.3.7 (c) applies (flow rates)

All Felton products are designed, manufactured and inspected/tested, that are WaterMark certified, are subject to flow rates testing that is within the limitation set by the AS/NZS 3500 (NZBC) and the WELS regulations.

G12.3.10 applies (performance)

Felton water supply taps are designed to be accessible and operable, including for people with disabilities, when installed in accordance with Felton's instructions, supporting compliance with the accessibility requirements of the NZ Building Code.

WHAT IS IN THE PACK

1 x sink mixer	1 x sink fixing kit	1 x counterweight
2 x supply hoses	1 x mounting support (triangle)	2 x dual check valves
1 x flange & bench top o-ring	1 x rubber washer for pull-out spray hose	

MOUNTING OPTIONS

1. When installing <u>with</u> the Mounting Support	2. When installing <u>without</u> the Mounting Support
PREFERRED MOUNTING SCENARIO Maximum thickness = 20mm 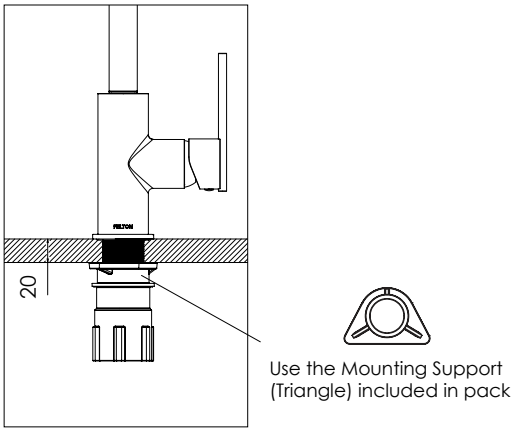 	Maximum thickness = 35mm 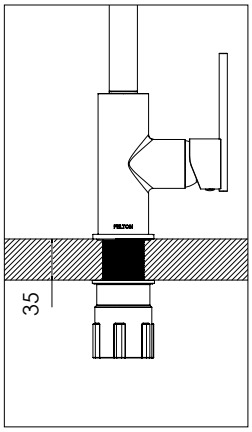

For technical assistance please ring
NZ 0800 743 358 or (09) 528 0810 | AUS 1800 798 760

Felton Industries Limited
Felton Australia Pty Ltd
8 Farmhouse Lane, St Johns, Auckland 1072 New Zealand
PO Box 4191 Burwood East Victoria 3151, Australia
www.felton.co.nz
www.feltontapware.com.au

HOW TO INSTALL

If mixer is being installed on a vitreous china bench top, apply silicone sealant to the base ring to ensure a water-tight seal on the uneven surface.

1. Cut a mounting hole 35mm in diameter. There must be a minimum 80mm distance from the center of the hole to the wall (diagram A).
2. Fit bench top o-ring to flange. Fit flange to the base of the mixer.
3. Fit the mixer through the hole and fit all the fittings as shown in diagram B (mounting support may be required for better stability).
4. Tighten the mounting tube (diagram B).
5. Fit the spray hose (grey) into the outlet port, checking to fit the rubber washer (diagram C).
6. Screw the “HOT” supply hose (with red marking) into the mixer tail (with red marking) (diagram C).
7. Screw the “COLD” supply hose (unmarked) into the unmarked mixer tail (diagram C).
8. Fit the Dual Check Valve on both hot and cold water supply. (diagram D).
9. Check the mixer and the flange are correctly aligned on the bench.
10. Fit the counterweight onto the spray hose (grey) under the benchtop.
11. Check and pull the spray head for the suitable length and adjust the counterweight accordingly.
12. Flush the supply pipes to remove debris.
13. Connect the water supply with the appropriate fittings and check all the fittings are tight.
14. Turn on water supply and check for leaks.

Maximum bend for flexible hose is 35mm radius. The nipples on the hoses must be connected to fittings which have machined end faces, not “sawn off” threaded tube.

A. Minimum distance from the center of the hole to the wall

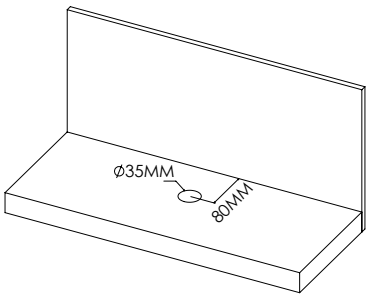

B.

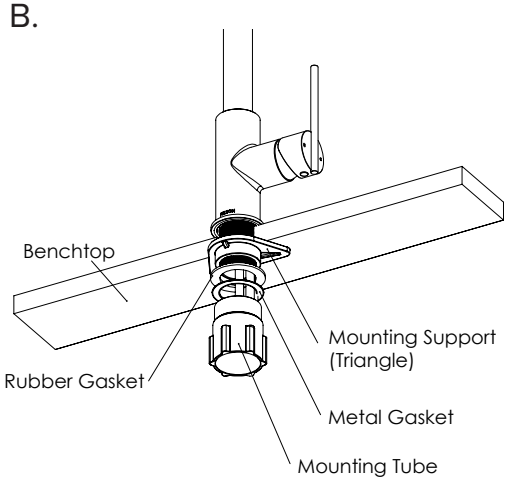

C.

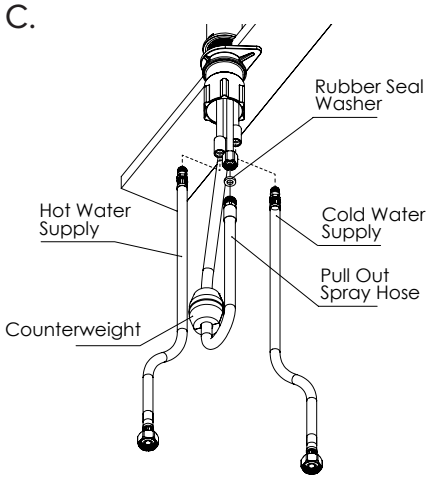

D.

