INSTALLATION GUIDE

AERLUX® WET RAIL SINGLE SPRAY SLIDE SHOWER

FELTON

SYSTEM REQUIREMENTS

To ensure the optimum performance and customer satisfaction please adhere to the following:

- Flush out all pipe work prior to installation.
- Installation should comply with relevant local authority requirements.
- Backflow protection must be provided in accordance with AS/NZS 3500 and local authority requirements, as assessed and installed by a registered plumber; backflow devices may or may not be supplied depending on product.
- Installation must be carried out by a registered plumber in accordance with AS/NZS 3500, the New Zealand Building Code and Felton instructions.
- Inspection and maintenance must be carried out in accordance with Felton instructions to ensure ongoing performance and compliance.

⚠ **AS/NZS 3500.1 states that pressures above 500kPa can cause damage from water hammer, reduce the life of appliances, taps & fittings, cause excessive noise in the system and recommend that a pressure limiting valve (PLV) be fitted.**

⚠ **Failure to comply with the above will void all warranties.**

	MINIMUM	MAXIMUM
Operating pressures	70kPa (5.1psi)	500kPa (72.1psi)
Operating Hot Water Temperatures	55°C	60°C
Operating Cold Water Temperatures	5°C	N/A

BUILDING PRODUCT INFORMATION REQUIREMENTS (BPIR)

RELEVANT BUILDING CODE CLAUSES & CONTRIBUTIONS TO COMPLIANCE

This product is Watermarked under license **WM25644 - Showers AS/NZS 3662: 2005 (Pending)**

B2 - Durability

B2.3.1 (c) applies (performance of building elements)

Proof of durability – Service history: Felton products have been installed and used in NZ for the last 50 years and warranty calls are at a minimum and within the quality principles of Felton.

Products that are WaterMark certified are subject to endurance testing.

F2 - Hazardous building materials

F 2.3.1 applies (performance)

Backflow protection must be provided in accordance with AS/NZS 3500 and local authority requirements, as assessed and installed by a registered plumber; backflow devices may or may not be supplied depending on product.

G1 - Personal Hygiene

G1.3.1 applies (performance)

Felton shower products are designed to provide effective personal hygiene through the safe and reliable delivery of potable water. 4 Products are WaterMark certified and tested to AS/NZS 3500, ensuring suitability, performance, and durability for use in New Zealand plumbing systems.

G1.3.2 applies (performance)

Backflow protection must be provided in accordance with AS/NZS 3500 and local authority requirements, as assessed and installed by a registered plumber; backflow devices may or may not be supplied depending on product. Product features, performance information, and installation requirements are provided on Felton website product pages and supporting brochures to ensure correct specification and installation.

G12 - Water Supplies

G12.3.2 applies (contamination of water)

Backflow protection must be provided in accordance with AS/NZS 3500 and local authority requirements, as assessed and installed by a registered plumber; backflow devices may or may not be supplied depending on product.

G12.3.5 applies (performance)

Felton sanitary fixtures intended for utensil washing and personal washing, showering, or bathing are designed to be connected to a hot water supply, ensuring suitability for potable water, non-contamination, and compliance with the performance requirements of NZ Building Code G12.

G12.3.7 (c) applies (flow rates)

All Felton products are designed, manufactured and inspected/tested, that are WaterMark certified, are subject to flow rates testing that is within the limitation set by the AS/NZS 3500 (NZBC) and the WELS regulations.

G12.3.10 applies (performance)

Felton water supply taps are designed to be accessible and operable, including for people with disabilities, when installed in accordance with Felton's instructions, supporting compliance with the accessibility requirements of the NZ Building Code.

FELTON

WHAT IS IN THE PACK

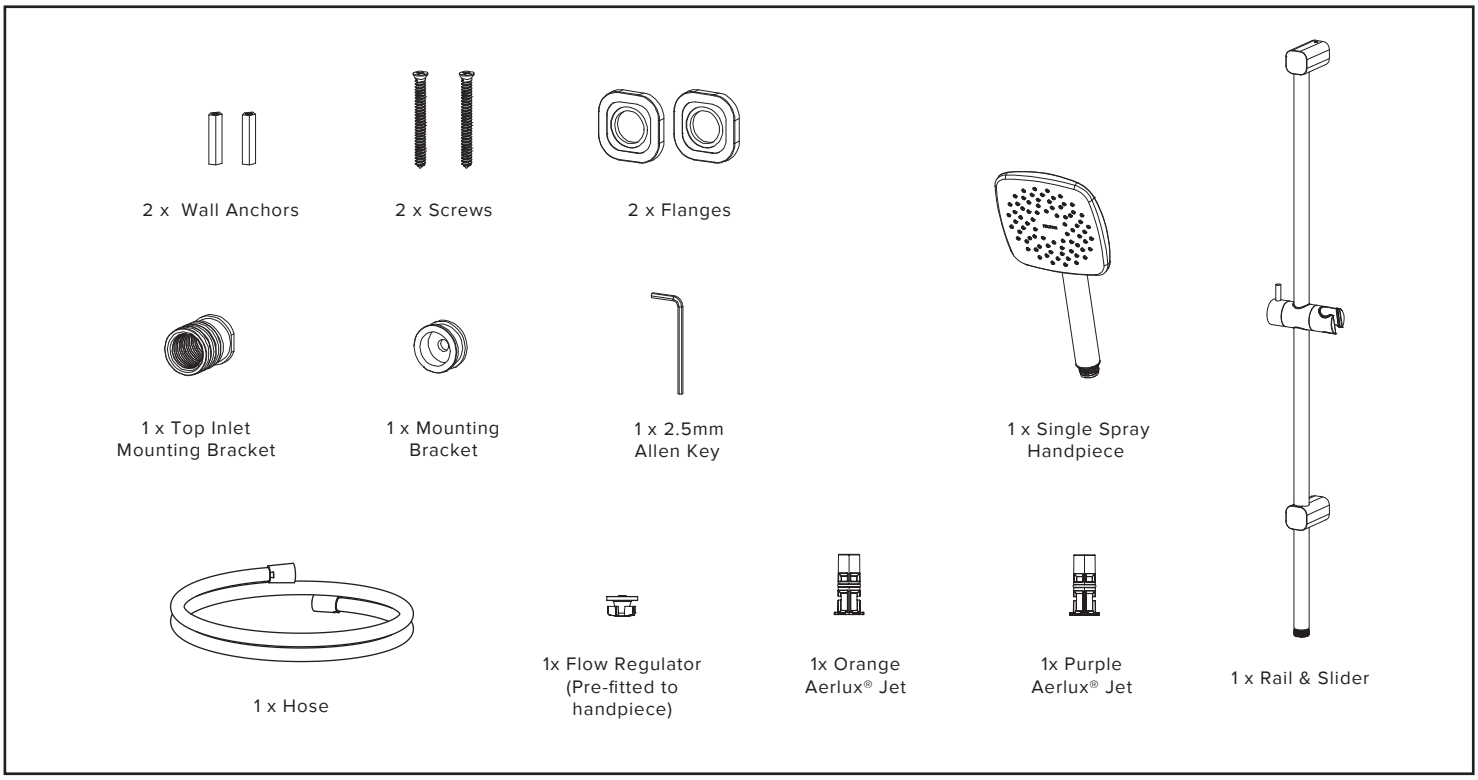

CHOOSING THE AERLUX® JET

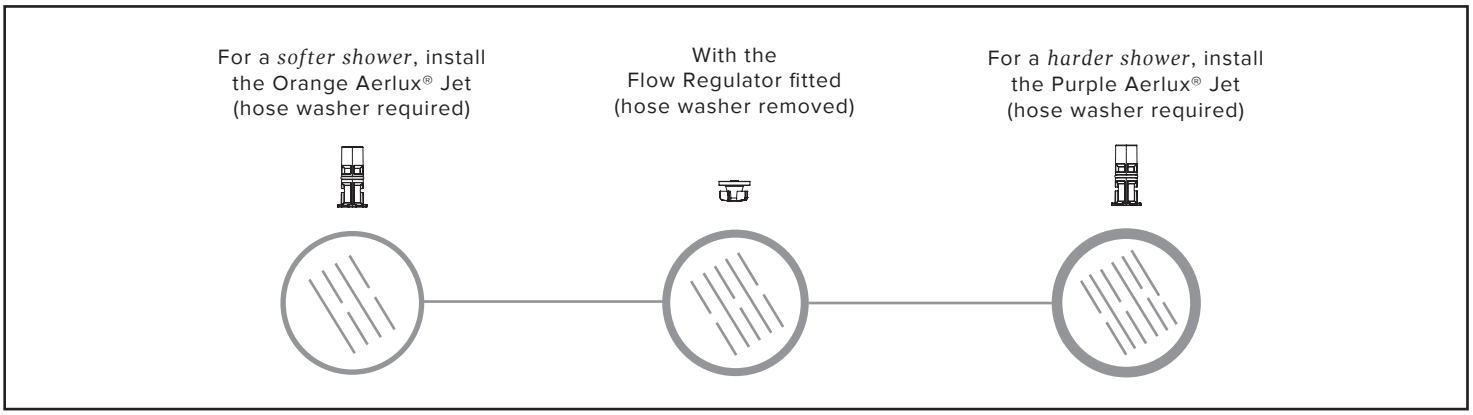

For technical assistance please ring
NZ 0800 743 358 or (09) 528 0810 | AUS 1800 798 760

Felton Industries Limited
Felton Australia Pty Ltd
8 Farmhouse Lane, St Johns, Auckland 1072 New Zealand
PO Box 4191 Burwood East Victoria 3151, Australia
www.felton.co.nz
www.feltontapware.com.au

221026HM

FELTON

HOW TO INSTALL

INSTALLING INTO STUD/NOG...(RECOMMENDED)

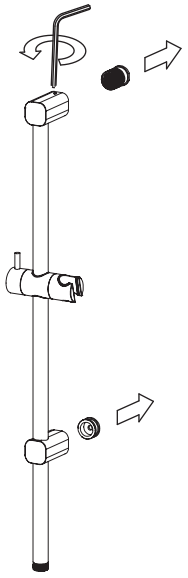

1. Untighten the grub screws from the top and bottom of the rail with a 2.5mm allen key and remove the brackets.

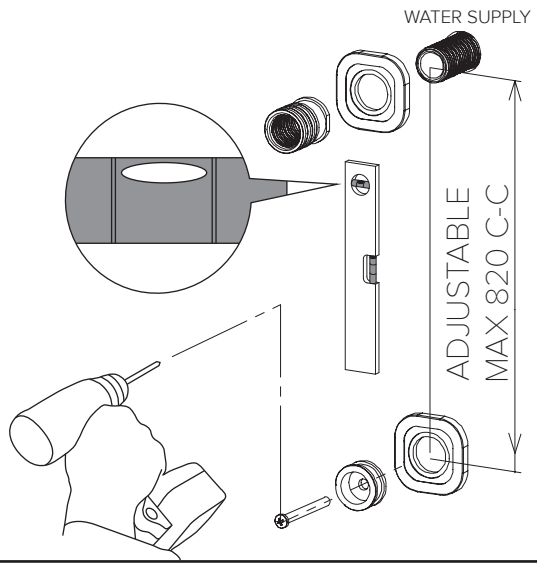

2. Screw the Top Inlet Mounting Bracket together with a flange onto the water outlet. Sealant is required on thread to achieve a water tight seal.
Mount the brackets and a flange into the desired position on the wall (adjustable MAX 820mm c-c), ensuring that they are in the correct orientation.

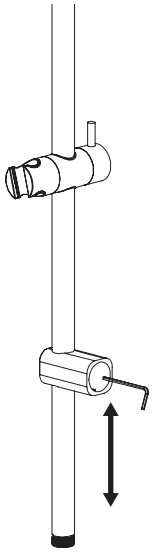

3. Adjust the bottom bracket on the rail, using a 2.5mm allen key to loosen and tighten the grub screw inside the back of the bracket.

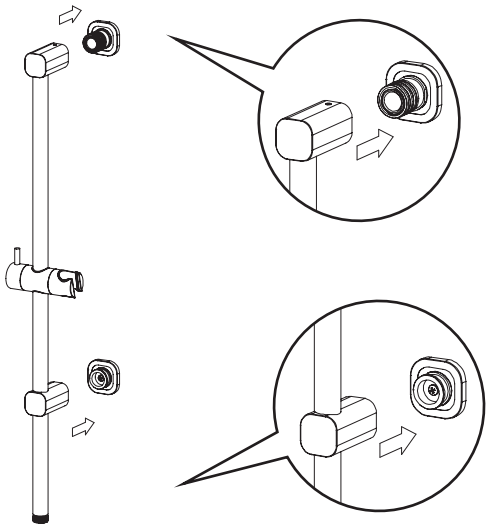

4. Fit the Rail over both top and bottom brackets. Then mount the rail onto the brackets in place. Ensure that both rail and bracket are secured. It is recommended that silicone sealant be used to seal the fixing brackets.

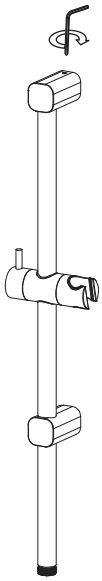

5. Tighten the grub screws on the rail with an allen key

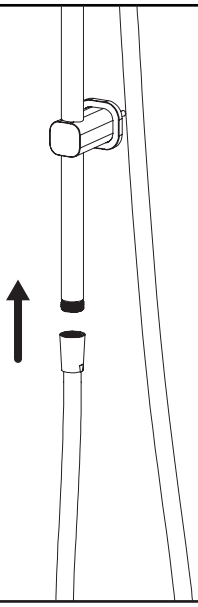

6. Fit the hose onto the bottom end of the rail.

INSTALLING INTO CONCRETE/BRICK WALL...

Pre-drill holes to the desired position (adjustable maximum 820mm c-c) and fit the wall anchors then follow the above instructions.

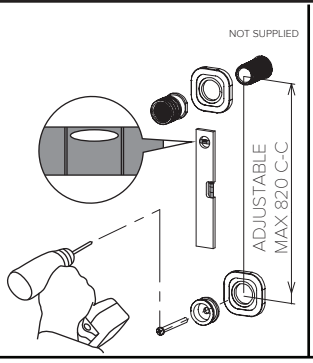

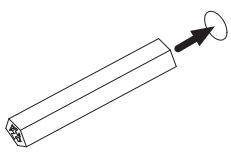

IF YOU HAVE...

EQUAL HIGH/MAINS PRESSURE

Fitting the Flow Regulator

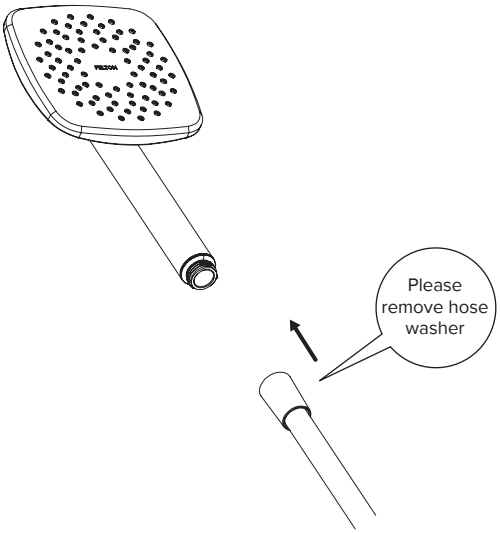

1. Supplied with the Flow Regulator prefitted - attach to the hose and place in slider

Fitting the Aerlux® Jets

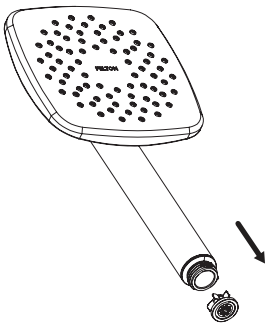

1. Remove the prefitted Flow Regulator from the handpiece...

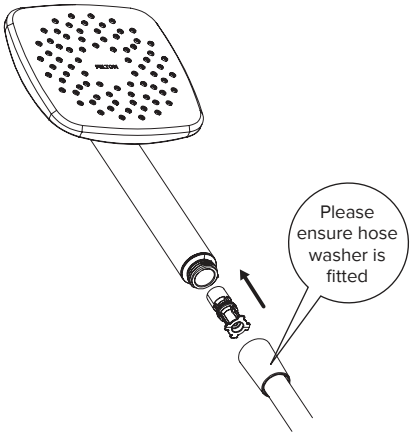

2. Select the Purple or Orange Aerlux® Jet and fit into the handpiece before screwing it onto the hose.

EQUAL LOW PRESSURE OR UNEQUAL PRESSURE

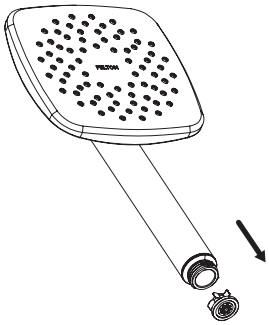

1. Remove the prefitted Flow Regulator from the handpiece...

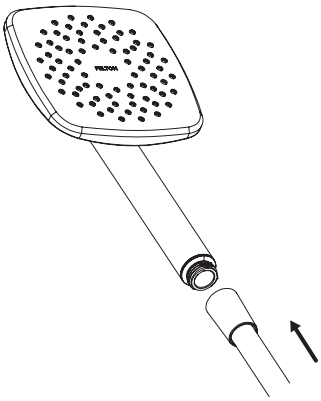

2. Attach to hose and place in slider